Vario



TECHNICAL INFORMATION

Size: 595 x 470 mm, h = 150 mm

Weight: 12 kg

Product segment: ROOT

TECHNICAL DRAWINGS

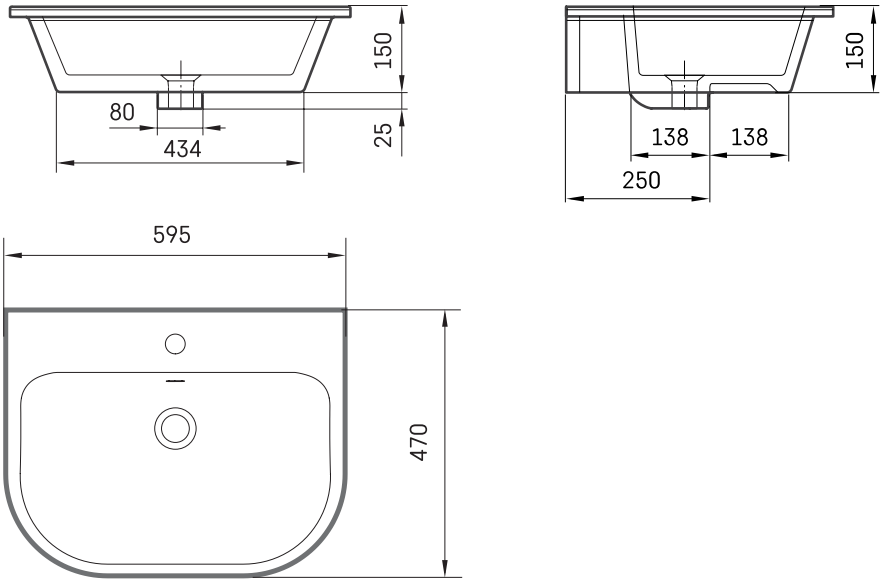

Ūnijas iela 12a,
Rīga, Latvija

View product: