Stretto MTM

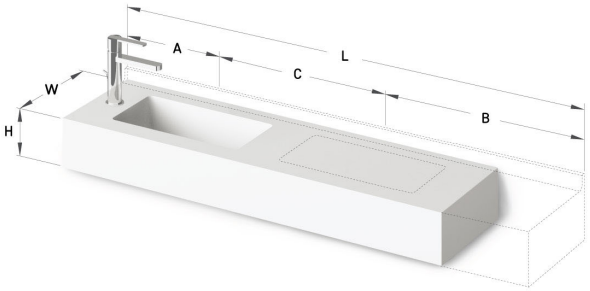

TECHNICAL INFORMATION

Size: 500 x 300 mm, h = 150 mm

Product segment: MTM

Size: 500 x 300 mm, h = 150 mm

TECHNICAL DRAWINGS

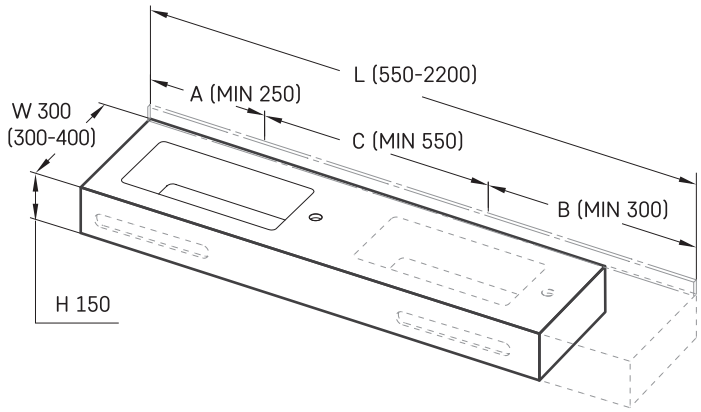

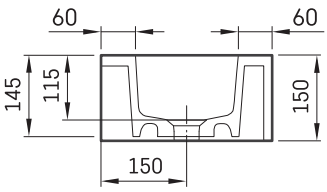

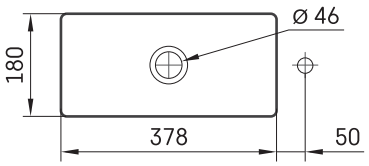

Ūnijas iela 12a,
Rīga, Latvija

View product: