Step

TECHNICAL INFORMATION

Size: 600 x 500 mm, h = 120 mm

Weight: 19 kg

Product segment: ROOT



Optional:

Brackets, 2 pcs., white: IZKTR/00

TECHNICAL DRAWINGS

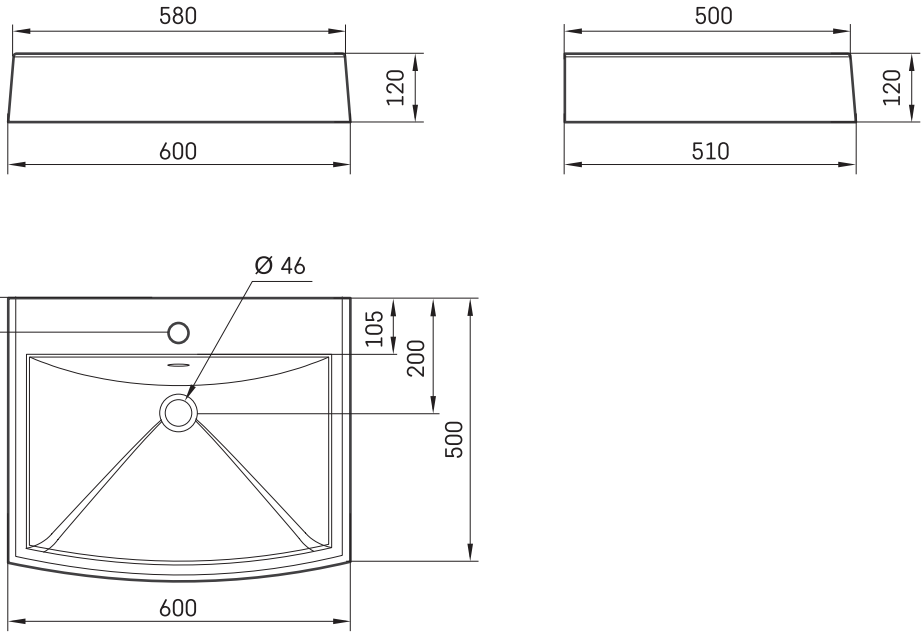

Ūnijas iela 12a,
Rīga, Latvija

View product: