Step Mini

TECHNICAL INFORMATION

Size: 470 x 310 mm, h = 105 mm

Weight: 9 kg

Product segment: ROOT



Optional:

Brackets, 2 pcs., white: IZKMST/00

TECHNICAL DRAWINGS

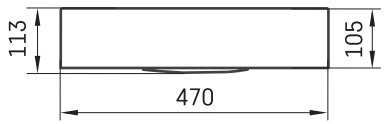

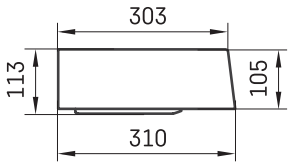

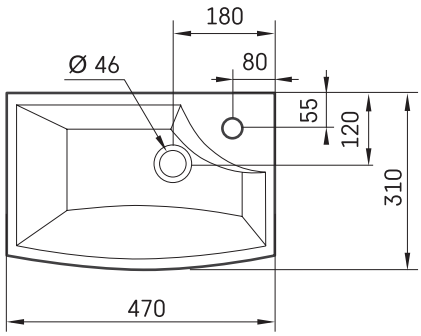

Ūnijas iela 12a,
Rīga, Latvija

View product: