Samba 70

TECHNICAL INFORMATION

Size: 695 x 375 mm, h = 133 mm

Weight: 13 kg

Product segment: ROOT

Optional:

Brackets, 2 pcs., white: IZKSA/00



TECHNICAL DRAWINGS

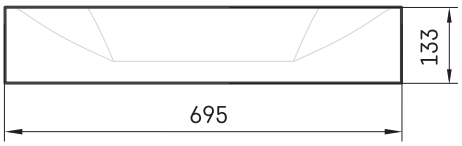

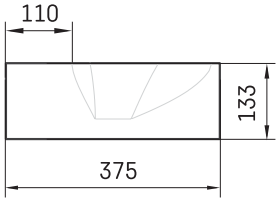

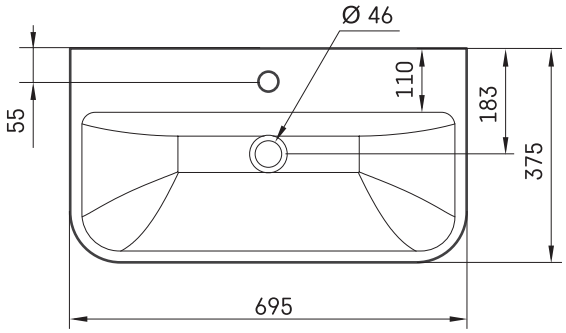

Ūnijas iela 12a,
Rīga, Latvija

View product: