Quadro



TECHNICAL INFORMATION

Size: 700 x 430 mm, h = 137 mm

Weight: 18 kg

Product segment: CORE

TECHNICAL DRAWINGS

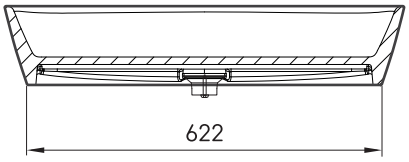

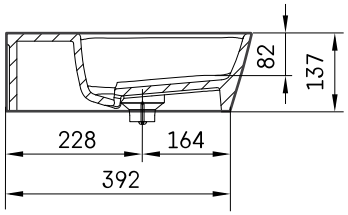

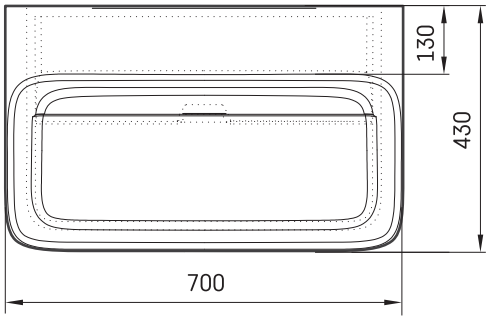

Ūnijas iela 12a,
Rīga, Latvija

View product: