Pointe



TECHNICAL INFORMATION

Size: 555 x 375 mm, h = 182 mm

Weight: 12,5 kg

Product segment: SIGNATURE

TECHNICAL DRAWINGS

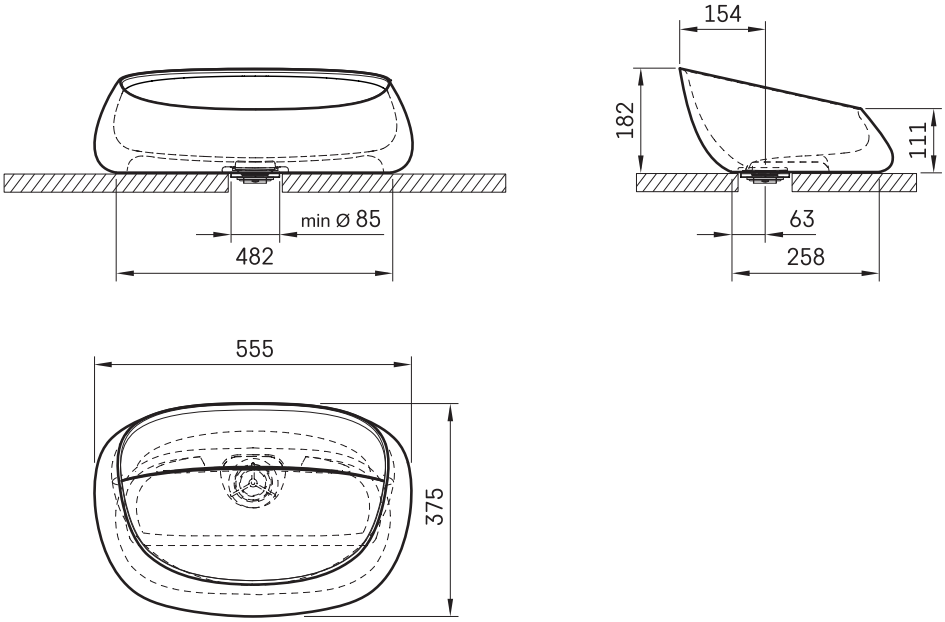

Ūnijas iela 12a,
Rīga, Latvija

View product: