Opus Mini MTM

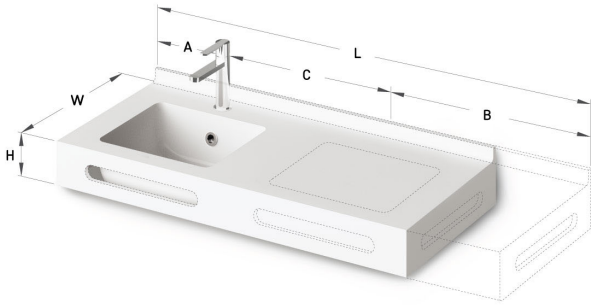

TECHNICAL INFORMATION

Size: 450-2200 x 420-500 mm, h = 25-150 mm

Product segment: MTM

TECHNICAL DRAWINGS

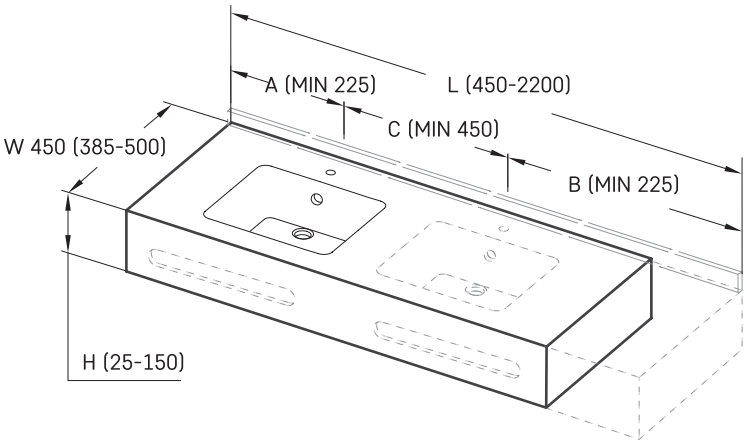

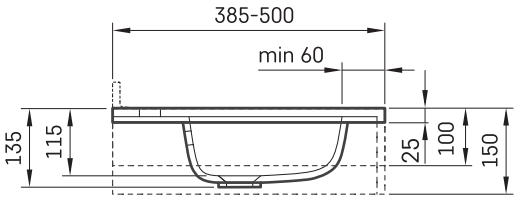

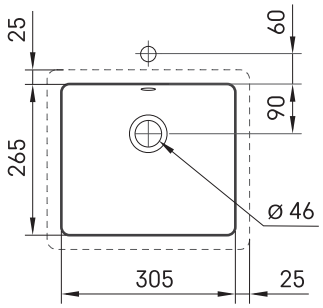

Ūnijas iela 12a,
Rīga, Latvija

View product: