Opus Grande MTM

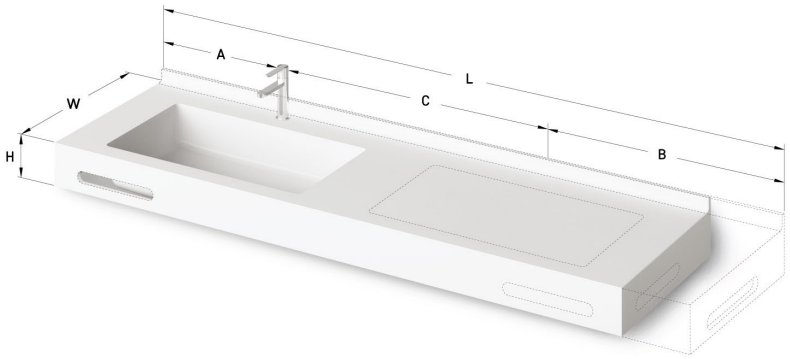

TECHNICAL INFORMATION

Size: 700-2000 x 490-550 mm, h = 25-150 mm

Product segment: MTM

TECHNICAL DRAWINGS

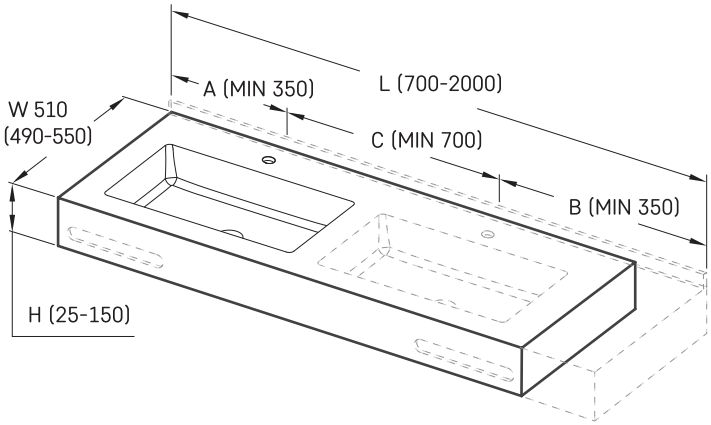

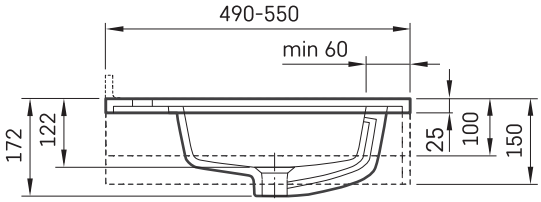

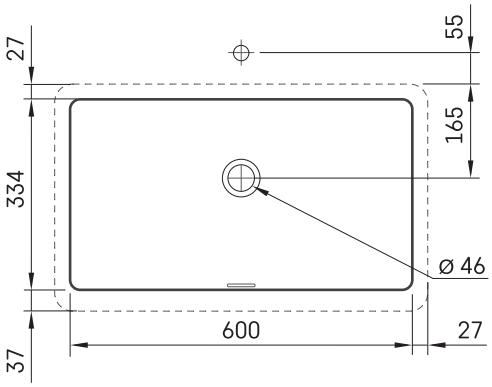

Ūnijas iela 12a,
Rīga, Latvija

View product: