Loto Mini 70

TECHNICAL INFORMATION

Size: 700 x 400 mm, h = 18 mm

Weight: 17 kg

Product segment: ROOT



Optional:

Brackets 310 mm: IZKSS310GB1/00

Permanent open drain in metal, chrome colour cover: L2264

Permanent open drain with Cast Stone cover: DKIZPBNOP/xx

TECHNICAL DRAWINGS

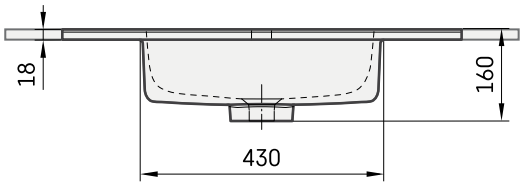

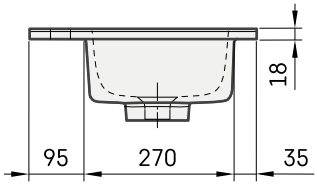

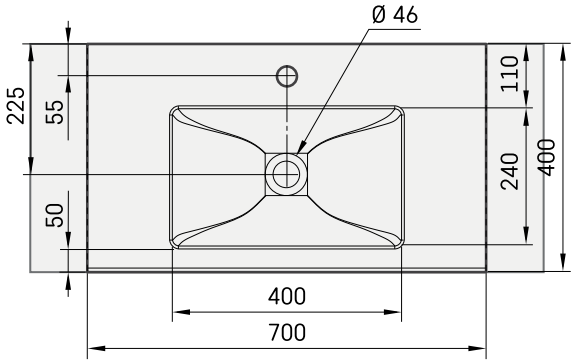

Ūnijas iela 12a,
Rīga, Latvija

View product: