Loto 60-120

TECHNICAL INFORMATION

Size: 600-1200 x 490 mm, h = 18 mm

Weight: 35 kg

Product segment: ROOT

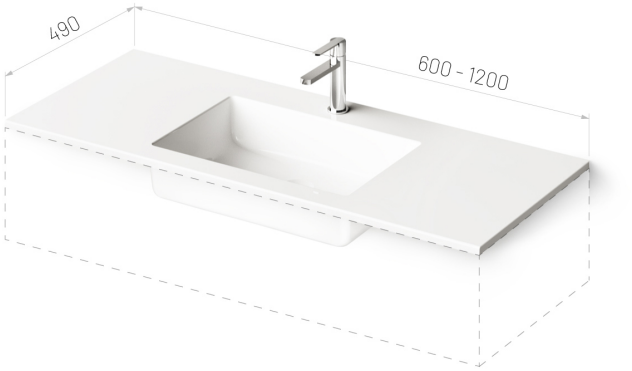

Optional:

Brackets 400 mm: IZKSS400GB1/00

Permanent open drain in metal, chrome colour cover: L2264

Permanent open drain with Cast Stone cover: DKIZPBNOP/xx

TECHNICAL DRAWINGS

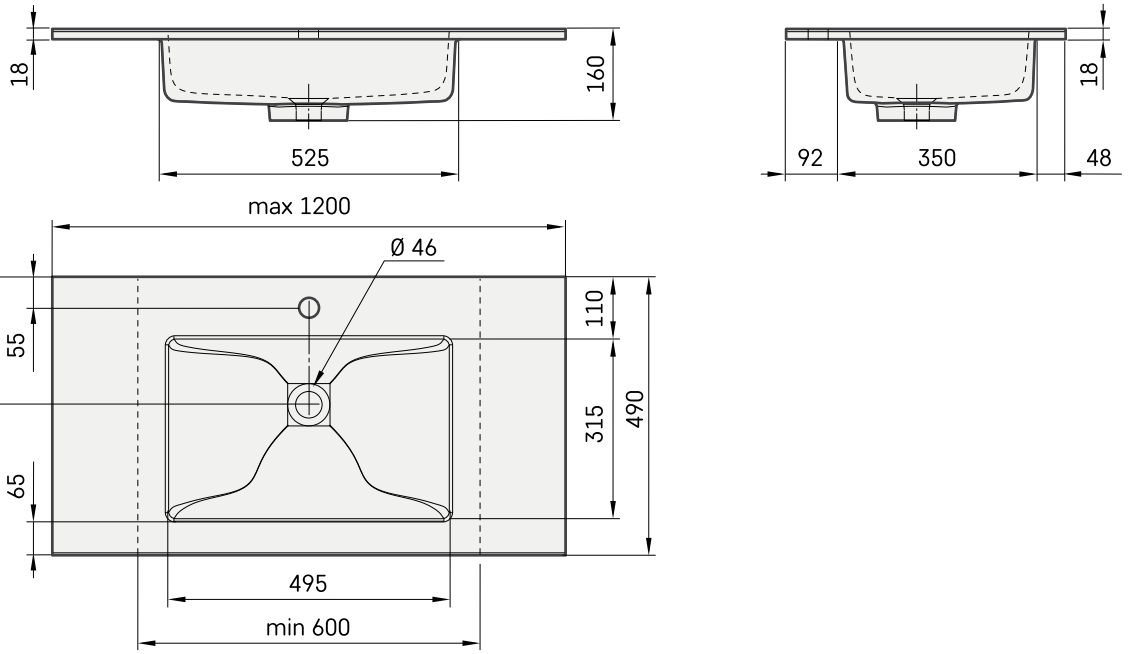

Ūnijas iela 12a,
Rīga, Latvija

View product: