Long Step 70



TECHNICAL INFORMATION

Size: 700 x 490 mm, h = 110 mm

Weight: 18 kg

Product segment: ROOT

TECHNICAL DRAWINGS

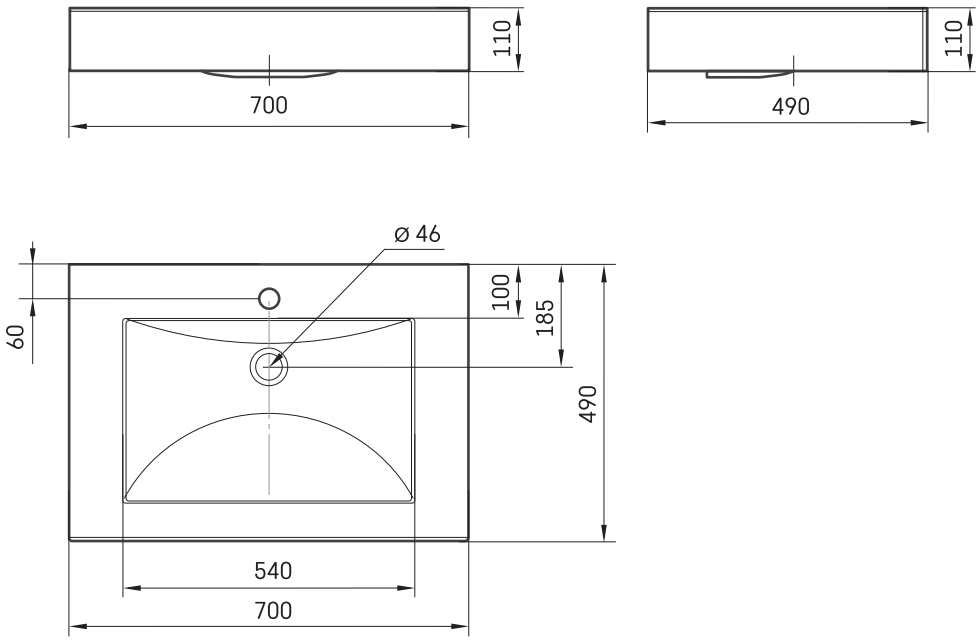

Ūnijas iela 12a,
Rīga, Latvija

View product: