Long Step 150 D

TECHNICAL INFORMATION

Size: 1500 x 490 mm, h = 110 mm

Weight: 44 kg

Product segment: ROOT



Optional:

Brackets, 2 pcs., white or satin colour: IZKLS/xx

Brackets, 2 pcs., stainless steel: IZKLS/NT

TECHNICAL DRAWINGS

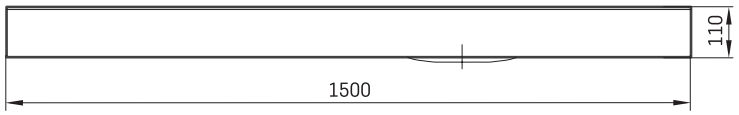

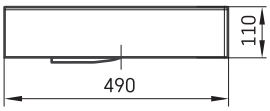

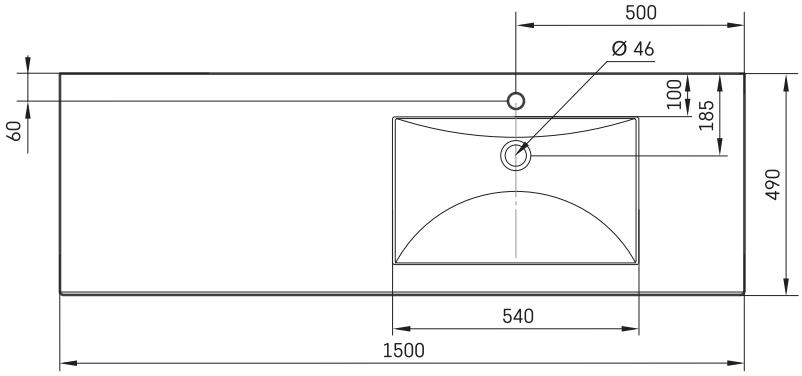

Ūnijas iela 12a,
Rīga, Latvija

View product: