Flow 45

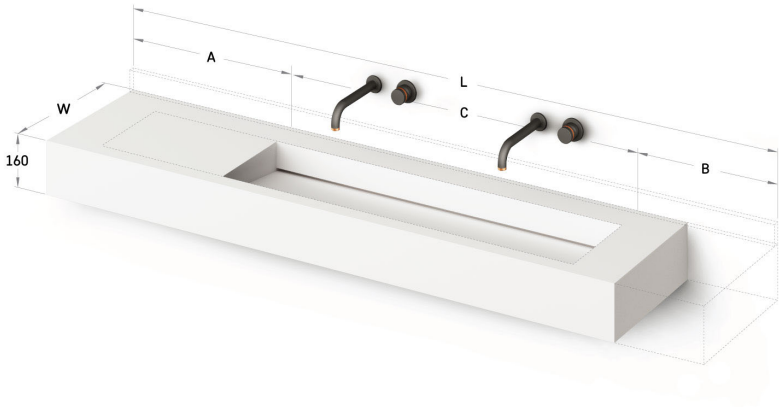

TECHNICAL INFORMATION

Size: 600-3000 x 450 mm, h = 160 mm

Product segment: MTM

TECHNICAL DRAWINGS

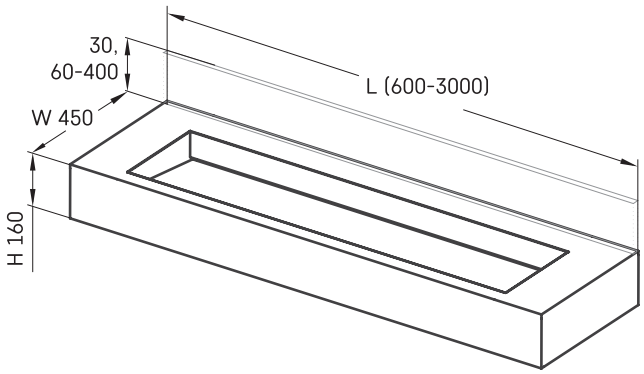

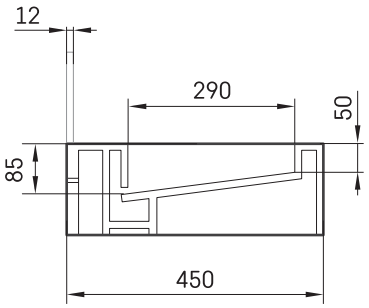

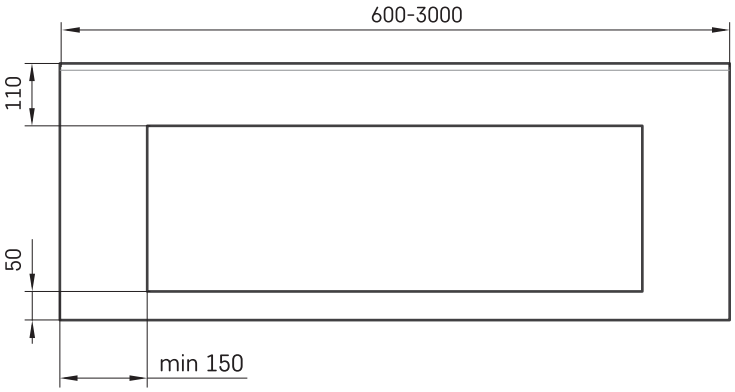

Ūnijas iela 12a,
Rīga, Latvija

View product: