Felice



TECHNICAL INFORMATION

Size: 690 x 375 mm, h = 158 mm

Weight: 12 kg

Product segment: CORE

TECHNICAL DRAWINGS

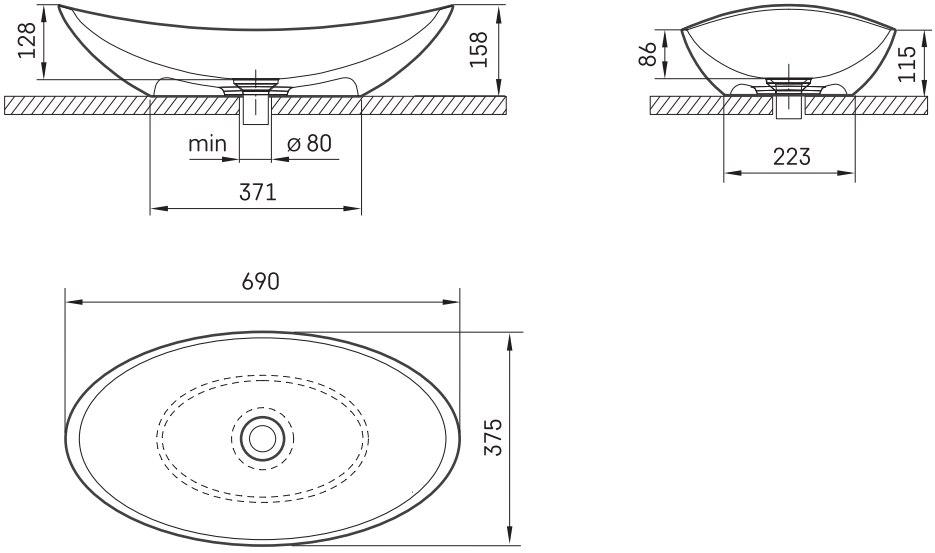

Ūnijas iela 12a,
Rīga, Latvija

View product: