Deco



TECHNICAL INFORMATION

Size: Ø 450 mm, h = 122 mm

Weight: 8 kg

Product segment: CORE

TECHNICAL DRAWINGS

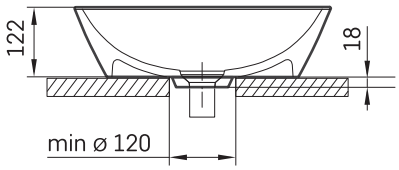

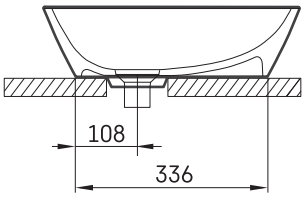

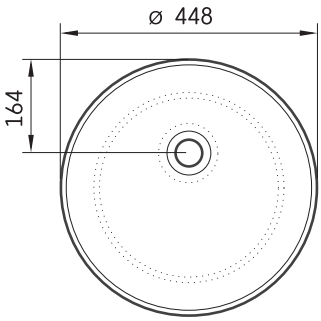

Ūnijas iela 12a,
Rīga, Latvija

View product: