Deco ON-TOP MTM

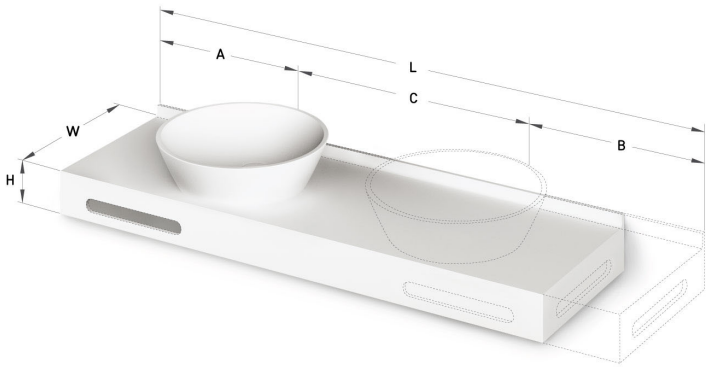

TECHNICAL INFORMATION

Size: 470 x 415 mm, h = 25 mm

Product segment: MTM

TECHNICAL DRAWINGS

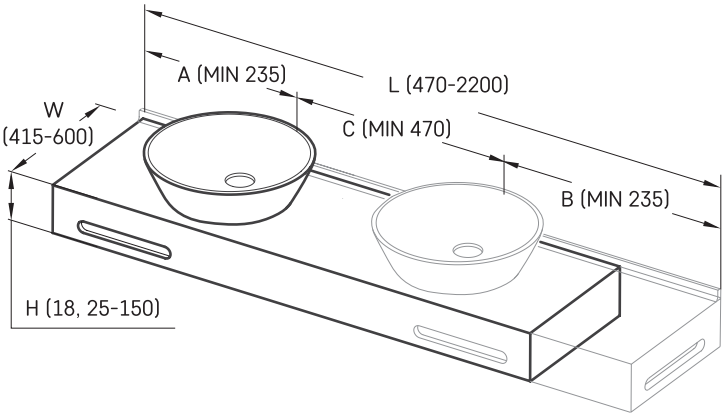

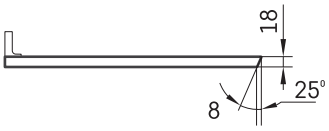

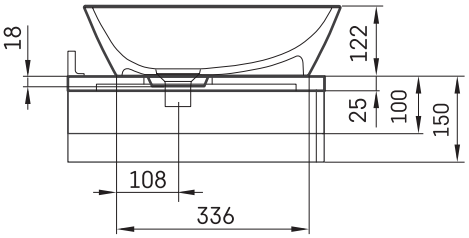

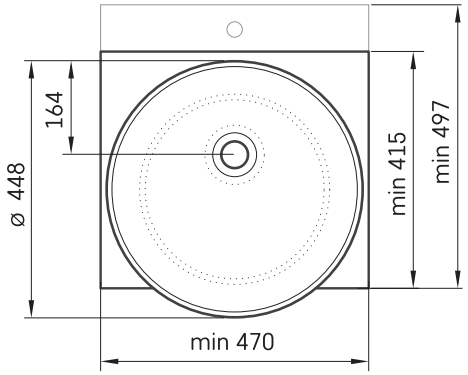

Ūnijas iela 12a,
Rīga, Latvija

View product: