Claro

TECHNICAL INFORMATION

Size: 600 x 600 mm, h = 90 mm

Weight: 22.5 kg

Product segment: ROOT



Optional:

Soap tray of another colour: DEIZTCLA/01

TECHNICAL DRAWINGS

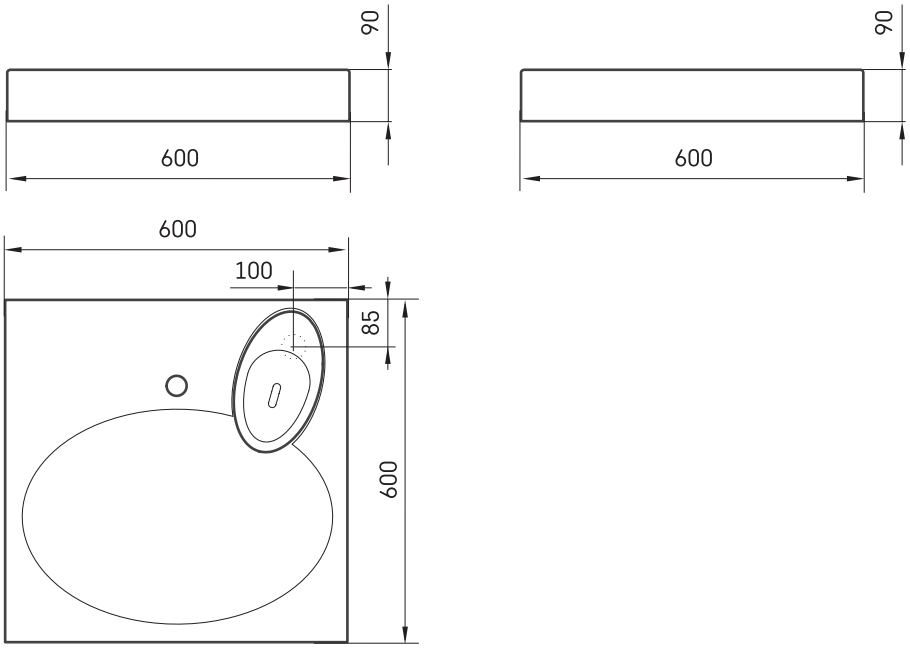

Ūnijas iela 12a,
Rīga, Latvija

View product: