Claro Grande

TECHNICAL INFORMATION

Size: 600 x 750 mm, h = 100 mm

Weight: 32 kg

Product segment: ROOT



Optional:

Soap tray of another colour: DEIZTCLAGR/01

TECHNICAL DRAWINGS

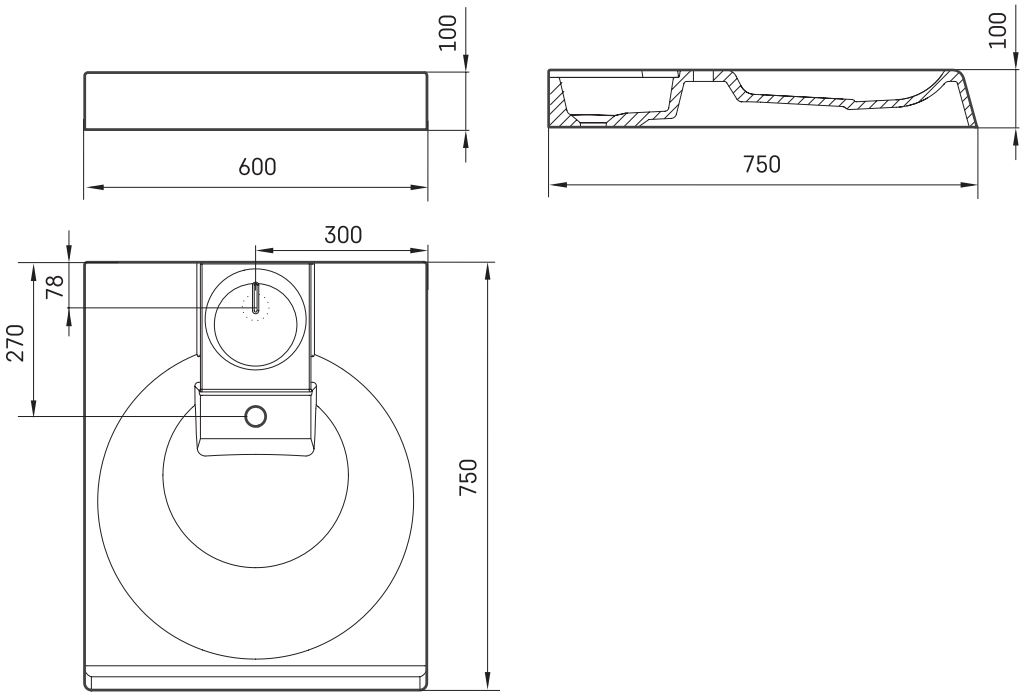

Ūnijas iela 12a,
Rīga, Latvija

View product: