Bella ON-TOP MTM

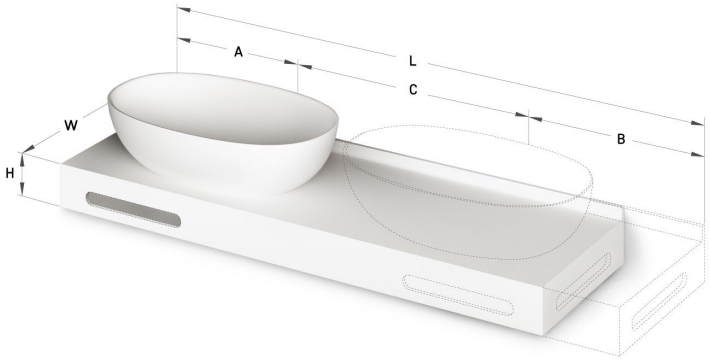

TECHNICAL INFORMATION

Size: 670 x 350 mm, h = 25 mm

Product segment: MTM

TECHNICAL DRAWINGS

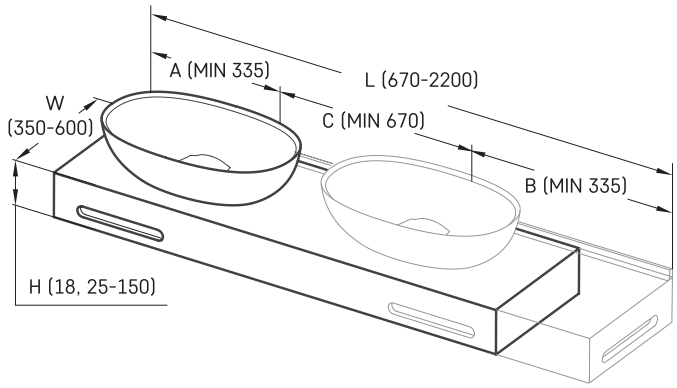

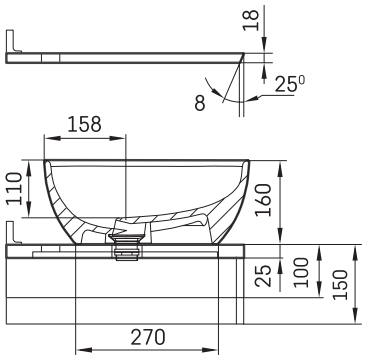

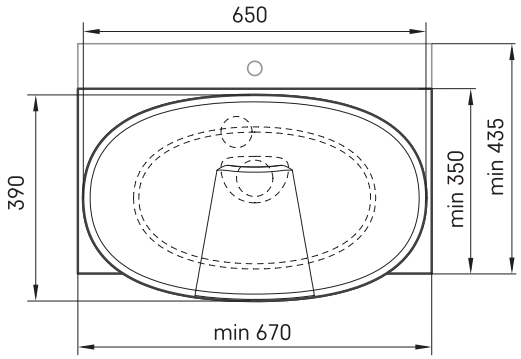

Ūnijas iela 12a,
Rīga, Latvija

View product: