Alba On 35

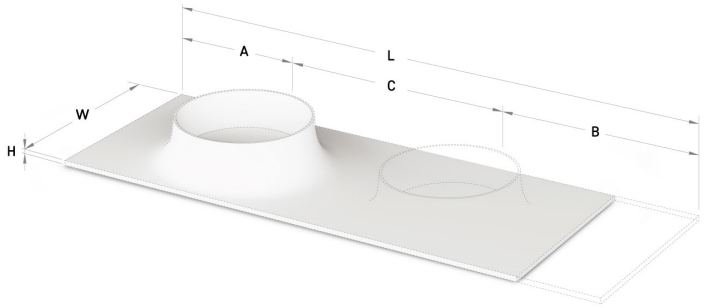

TECHNICAL INFORMATION

Size: 530 x 480 mm, h = 128 mm

Product segment: SIGNATURE

TECHNICAL DRAWINGS

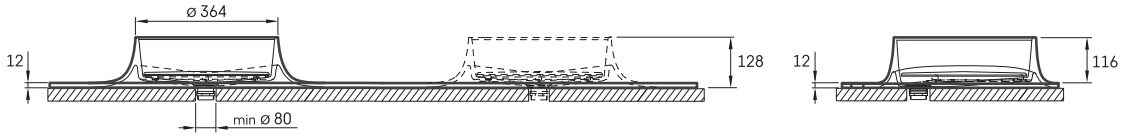

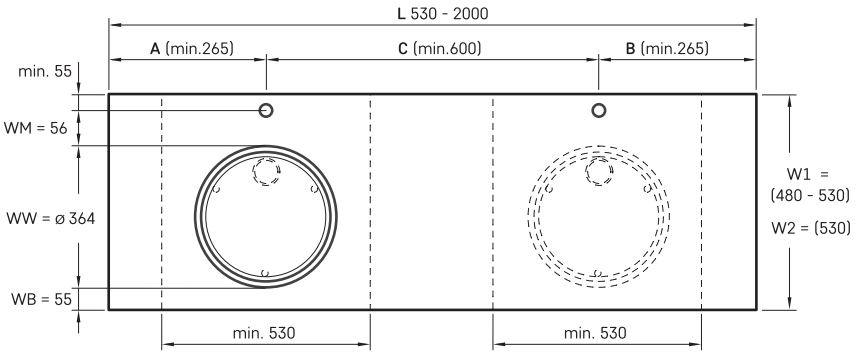

Ūnijas iela 12a,
Rīga, Latvija

View product: