Alba On 30

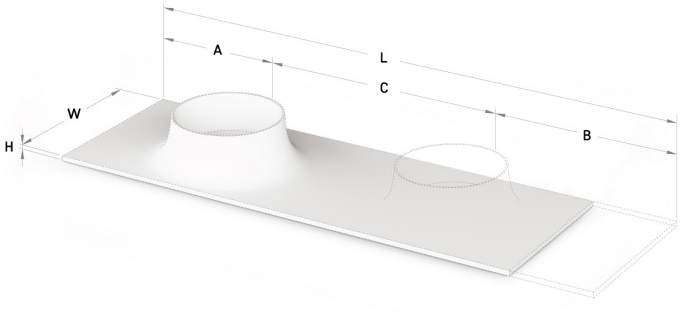

TECHNICAL INFORMATION

Size: 450 x 400 mm, h = 128 mm

Product segment: SIGNATURE

TECHNICAL DRAWINGS

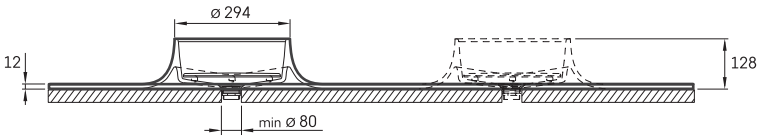



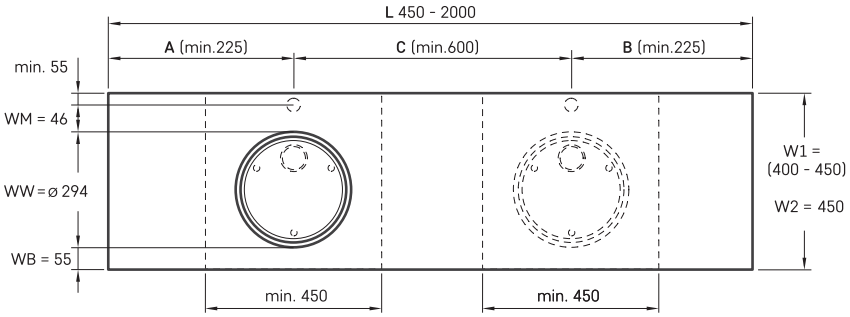

Ūnijas iela 12a,
Rīga, Latvija

View product: