Lettera KV 100

TECHNICAL INFORMATION

Size: 1000 x 1000 mm, h = 135 mm

Weight: 44 kg

Product segment: ROOT

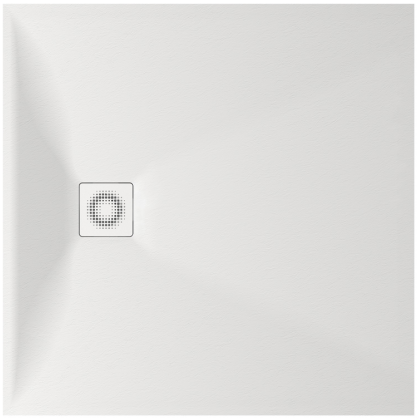

Optional:

Shower tray Lettera KV 100 with drain cover: DPLETKV100/xx

Siphon for Lettera shower tray 90 mm: HS1

Drain cover in stainless steel, satin white: DKDPLET/00

TECHNICAL DRAWINGS

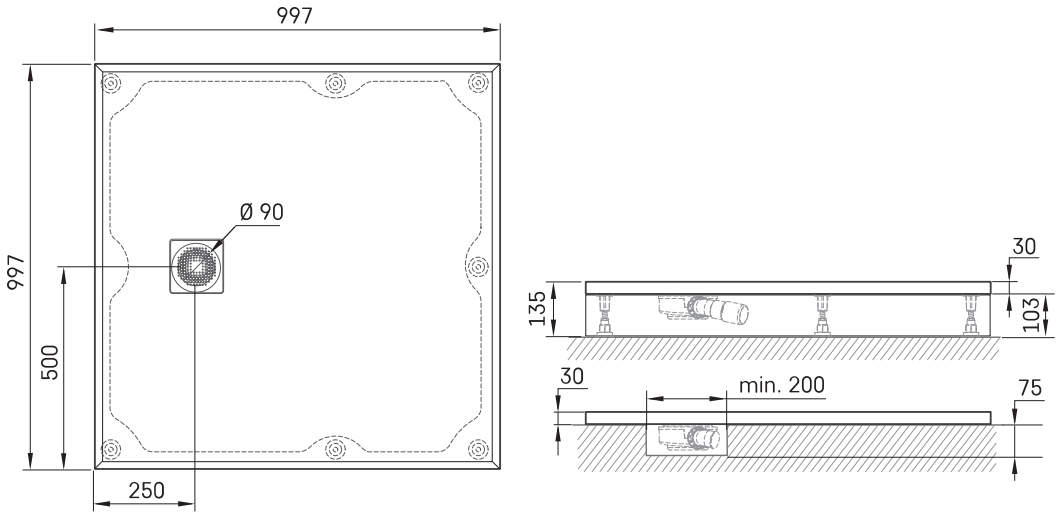

Ūnijas iela 12a,
Rīga, Latvija

View product: