Lettera 90 × 120

TECHNICAL INFORMATION

Size: 900 x 1200 mm, h = 135 mm

Weight: 46 kg

Product segment: ROOT

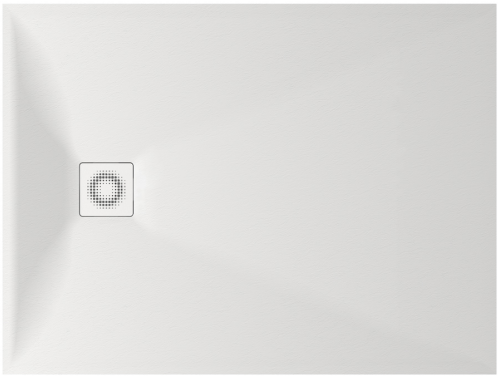

Optional:

Shower tray Lettera 90 × 120 with drain cover: DPLET90X120/xx

Siphon for Lettera shower tray 90 mm: HS1

Drain cover in stainless steel, satin white: DKDPLET/00

Drain cover in stainless steel, satin black: DKDPLET/01

Drain cover in stainless steel, semi-matt metal: DKDPLET/02

TECHNICAL DRAWINGS

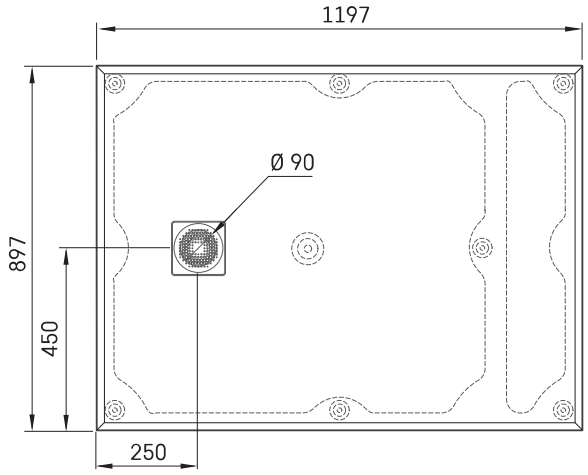

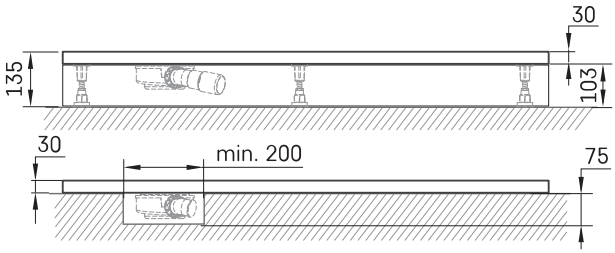

Ūnijas iela 12a,
Rīga, Latvija

View product: