Lettera 80 × 100

TECHNICAL INFORMATION

Size: 800 x 1000 mm, h = 135 mm

Weight: 34 kg

Product segment: ROOT

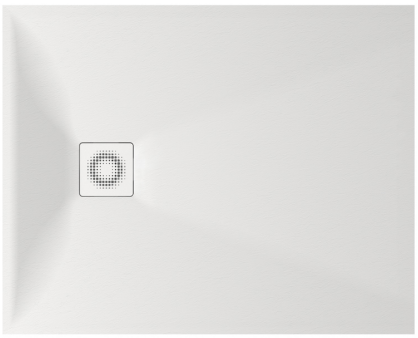

Optional:

Shower tray Lettera 80 × 100 with drain cover: DPLET80X100/xx

Siphon for Lettera shower tray 90 mm: HS1

Drain cover in stainless steel, satin white: DKDPLET/00

Drain cover in stainless steel, satin black: DKDPLET/01

Drain cover in stainless steel, semi-matt metal: DKDPLET/02

TECHNICAL DRAWINGS

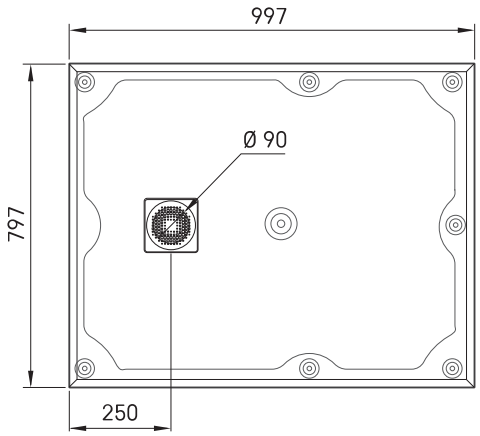

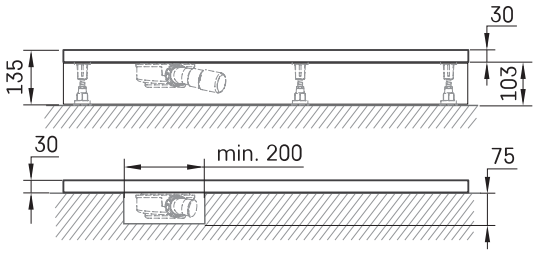

Ūnijas iela 12a,
Rīga, Latvija

View product: