Craft

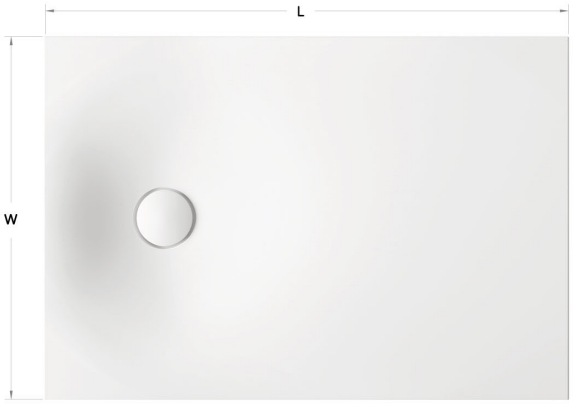

TECHNICAL INFORMATION

Size: 900-1800 x 800-1000 mm, h = 35-150 mm

Product segment: MTM

TECHNICAL DRAWINGS

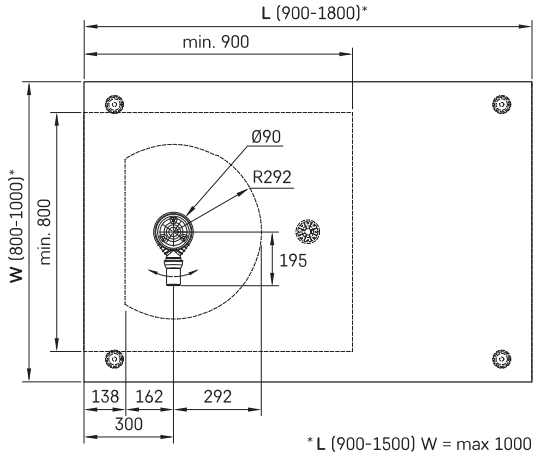

*L (900-1500) W = max 1000
*L (1501-1800) W = max 900

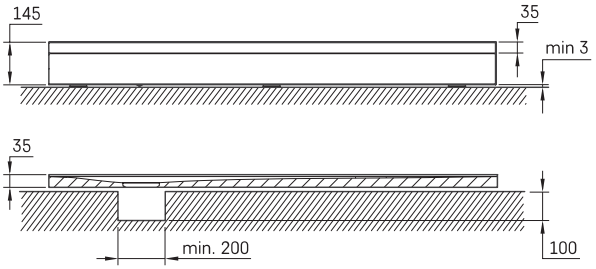

Ūnijas iela 12a,
Rīga, Latvija

View product: