CLASSIC RO 90 R 550

TECHNICAL INFORMATION

Size: 900 x 900 mm, h = 165 mm

Weight: 34 kg

Product segment: ROOT

Optional:

Siphon TurboFlow, ø 90 mm: 0205302



TECHNICAL DRAWINGS

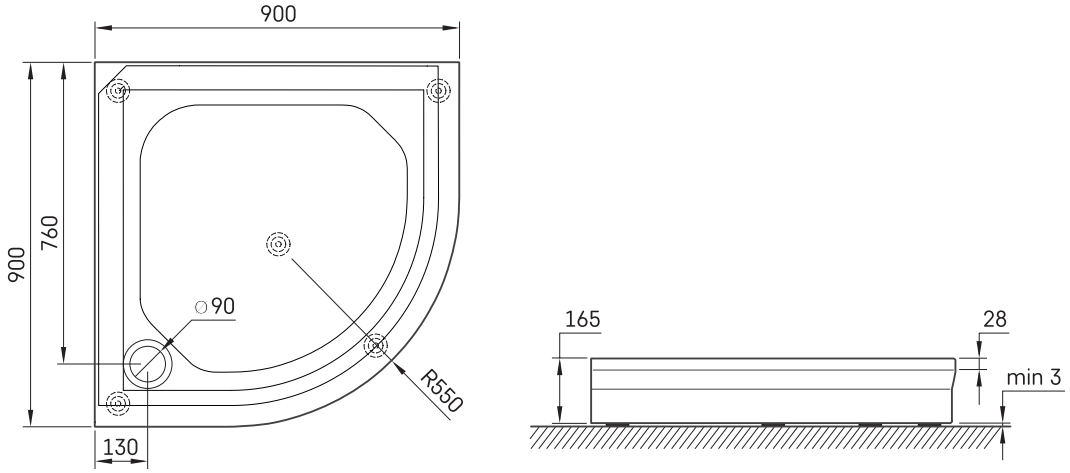

Ūnijas iela 12a,
Rīga, Latvija

View product: