# CLASSIC RO 100 R 550

## TECHNICAL INFORMATION

**Size:** 1000 x 1000 mm, h = 165 mm

**Weight:** 41 kg

**Product segment:** ROOT



**Optional:**

**Siphon TurboFlow, ø 90 mm:** 0205302

## TECHNICAL DRAWINGS

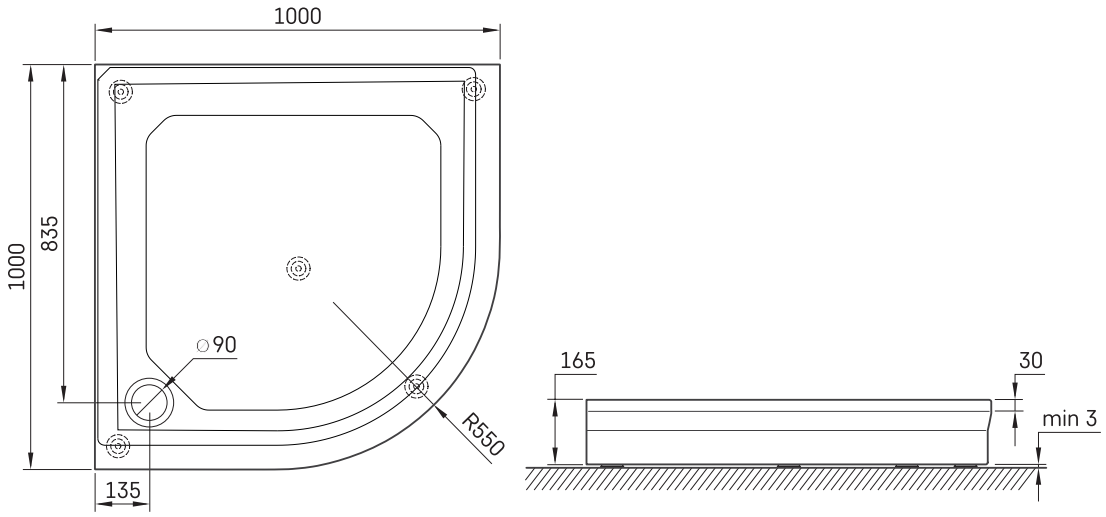


Ūnijas iela 12a,
Rīga, Latvija

View product: