CLASSIC KV 90

TECHNICAL INFORMATION

Size: 900 x 900 mm, h = 165 mm

Weight: 36 kg

Product segment: ROOT

Optional:

Siphon TurboFlow, ø 90 mm: 0205302



TECHNICAL DRAWINGS

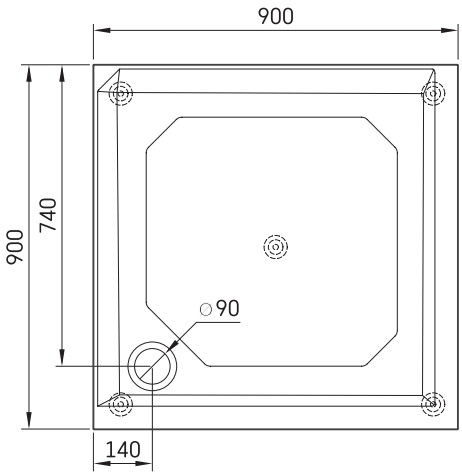

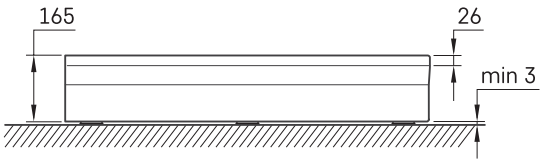

Ūnijas iela 12a,
Rīga, Latvija

View product: