ART 90x120

TECHNICAL INFORMATION

Size: 900 x 1200 mm, h = 135-135 mm

Weight: 57.2 kg

Product segment: ROOT

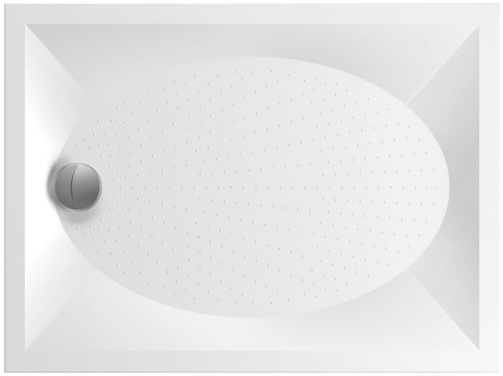

Optional:

Siphon TurboFlow, ø 90 mm: 0205302

TECHNICAL DRAWINGS

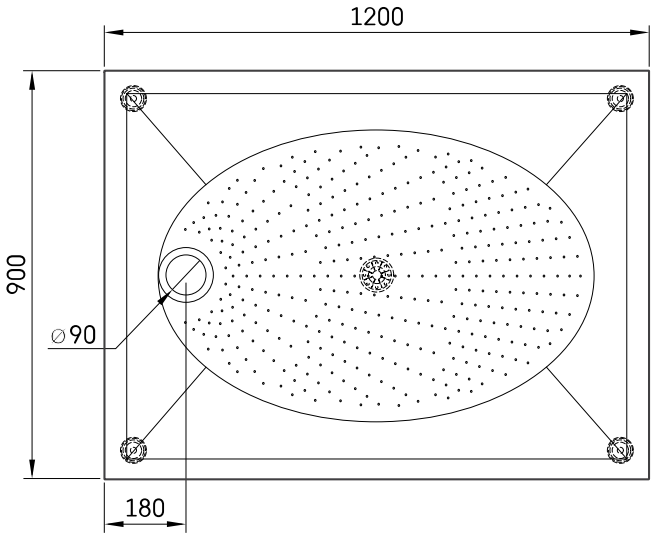

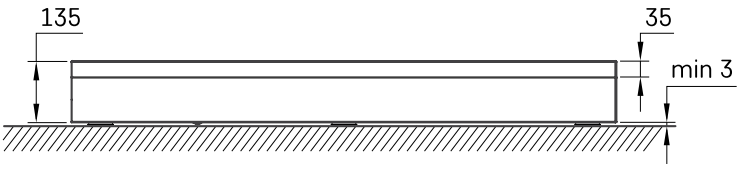

Ūnijas iela 12a,
Rīga, Latvija

View product: