ART 80x120

TECHNICAL INFORMATION

Size: 800 x 1200 mm, h = 135 mm

Weight: 47.1 kg

Product segment: ROOT

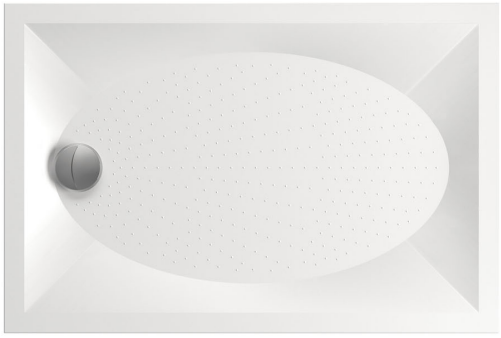

Optional:

Siphon TurboFlow, ø 90 mm: 0205302

TECHNICAL DRAWINGS

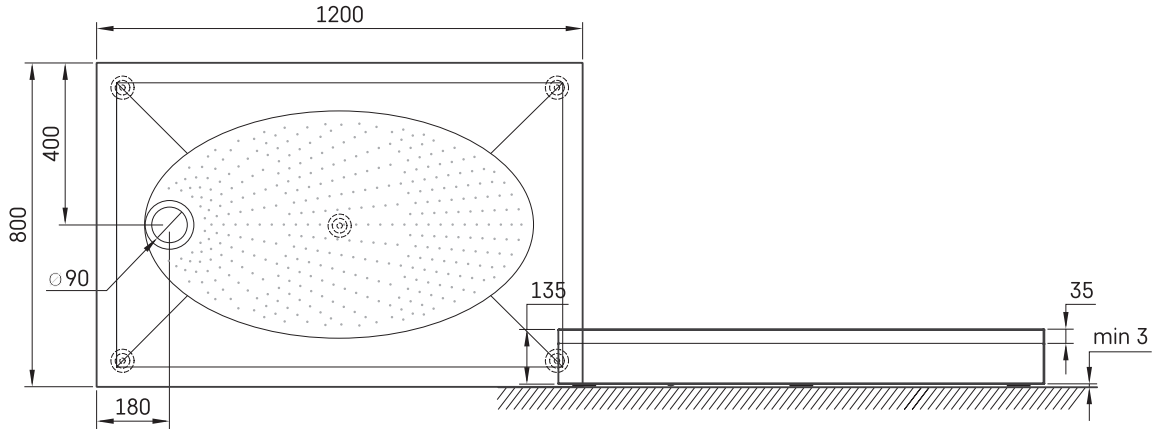

Ūnijas iela 12a,
Rīga, Latvija

View product: