ART RO 80 R 550

TECHNICAL INFORMATION

Size: 800 x 800 mm, h = 135 mm

Weight: 30 kg

Product segment: ROOT

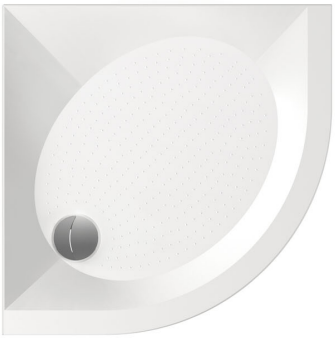

Optional:

Siphon TurboFlow, ø 90 mm: 0205302

TECHNICAL DRAWINGS

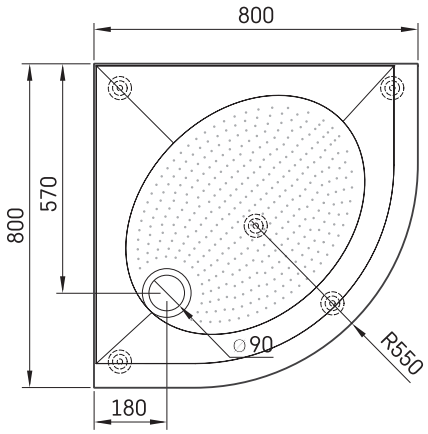

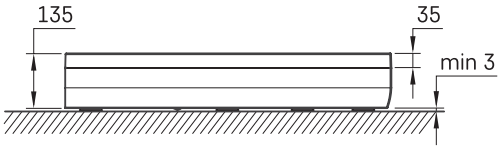

Ūnijas iela 12a,
Rīga, Latvija

View product: